Boom Gates

AUTOMATIC

Automatic Boom Gate

Typical installation in tandem with tyre spikes and induction loops

Materials
- Galvanised steel cabinet
- Aluminium boom arm

Finishes
- Powder coated
- 2-pack spray as an option

Features
- Variable boom lengths (up to 6m)
- 100% duty cycle
- Can be raised manually in the event of a power outage
- Corrosion resistant, easy maintenance

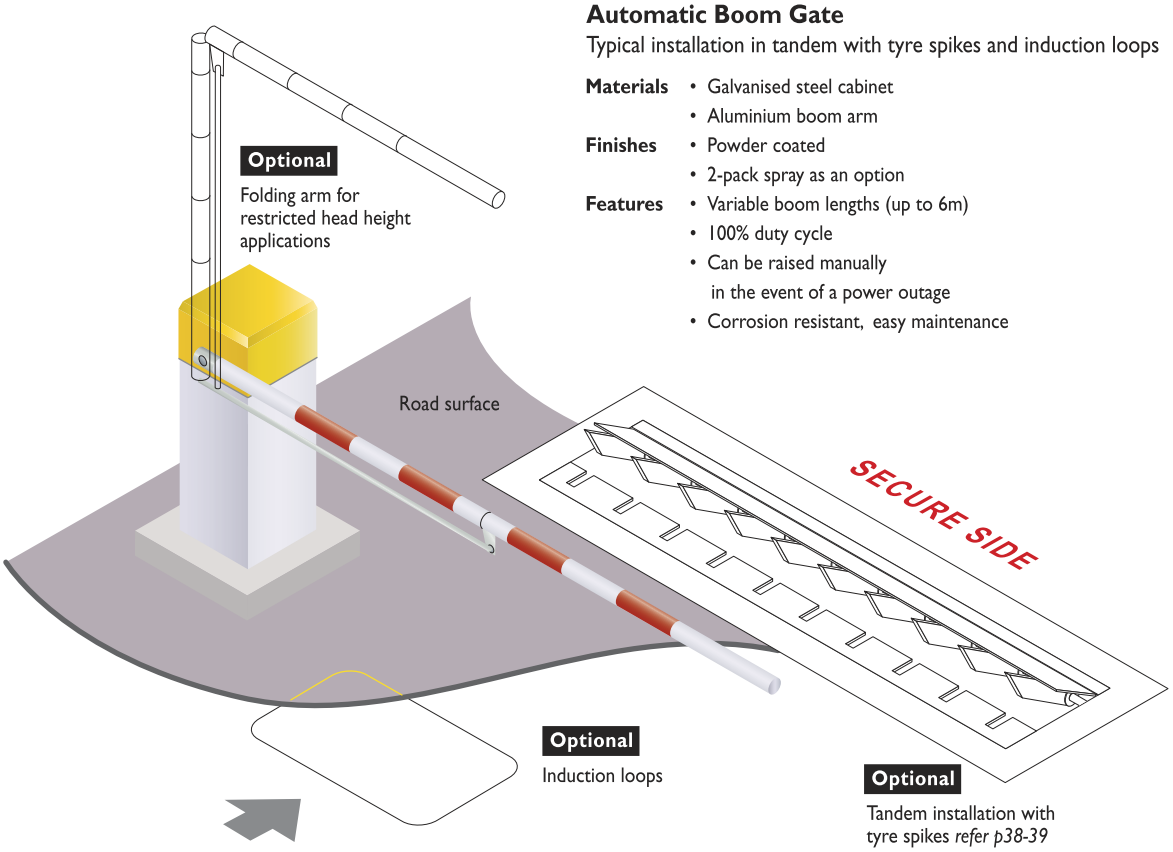

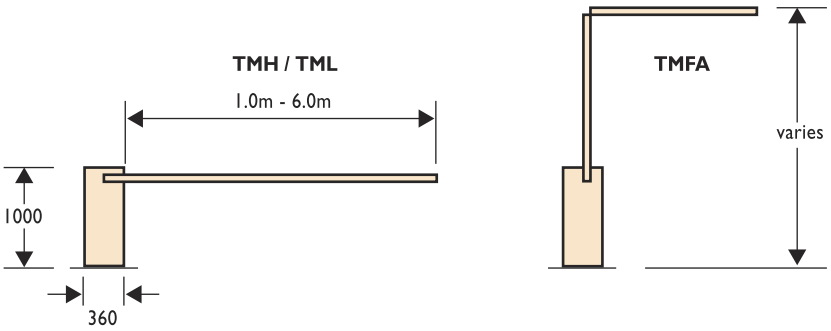

Product Range

Code	Description	Clear Opening [1] m	Optional Extension m
TMH	High Volume	3.5 one lane as standard	1m-6m
TML	Standard Volume	3.5 one lane as standard	1m-6m
TMFA	Folding Arm		
TMSK	Skirt (supplied in 2m length sections)		

1. Clear Opening is the width of the passage in which the boom gate assembly is manufactured to suit.

- *All configurations are standard, please contact your nearest Leda-Vannaclip Sales Office for custom sizes.*

Boom Gates

PRODUCT RANGE

Boom Gates perform the majority of access control functions for regulating vehicular traffic into and out of control areas. While the operation of Boom Gates across most models and variants have remained relatively simple over the years, the challenges surrounding the integration of a boom gate either as an extension to an existing system or as a subset of a new perimeter security installation are forever increasing. Users of Boom Gates, who, until recently relied on the operational consistency of a stand-alone boom gate are now starting to realise the relative ease at which a stand-alone boom gate system may be compromised either through manipulation or forced attack.

The need to have a high degree of inter-operatability of Boom Gates with other perimeter security devices have now come to fore as changing requirements now require seamless integration to work in tandem with other perimeter security equipment like barrier systems, retractable bollards, tyre spikes and electronic surveillance equipment.

The Leda-Vannaclip Group is well positioned to offer seamless integration of such equipment. As one of Australia's leading perimeter security specialist manufacturers and integration providers, the Leda-Vannaclip Group will work towards assuring you that the various products making up the security solution contributes towards the overall performance benchmarks of ease of integration, flexibility, co-ordination and favourable supply and installation times.

Applications

- Commercial and industrial areas
- Embassies and consulates
- Warehousing and distribution facilities
- Offices and government buildings
- Low-Medium security sections at power plants
- Schools, gymnasiums, car parks, sports stadiums
- Shopping centres
- National public parks, reserves

Automatic – High Volume

- *Areas of high traffic or critical industrial applications*

Automatic – Standard Volume

- *Areas of low to medium traffic*
- *Cost-effective option*

Automatic – Sliding Boom

- *Medium to high security*
- *Vandal resistant*
- *Remote locations*
- *Highly programmable*

Manual Boom Gate

- *Economic alternative*
- *Ideal for areas where power is unavailable*
- *Lightweight aluminium or steel for security applications*
- *Fixed and baseplate models*

Manual Swing Gate

- *Single or double*
- *Ideal for areas where power is unavailable*
- *Fixed and baseplate models*
- *Remote locations*

Boom Gates

AUTOMATIC

Automatic Boom Gate

Typical installation in tandem with tyre spikes and induction loops

Materials
- Galvanised steel cabinet
- Aluminium boom arm

Finishes
- Powder coated
- 2-pack spray as an option

Features
- Variable boom lengths (up to 6m)
- 100% duty cycle
- Can be raised manually in the event of a power outage
- Corrosion resistant, easy maintenance

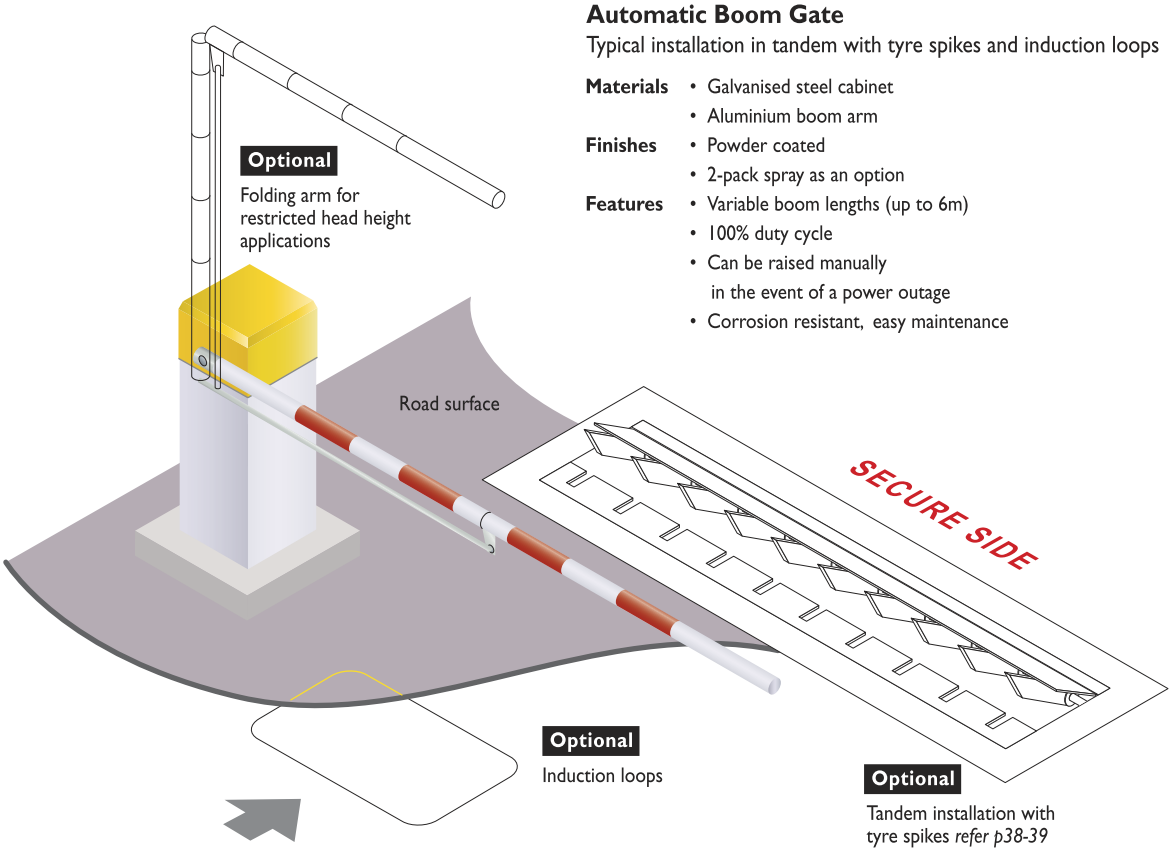

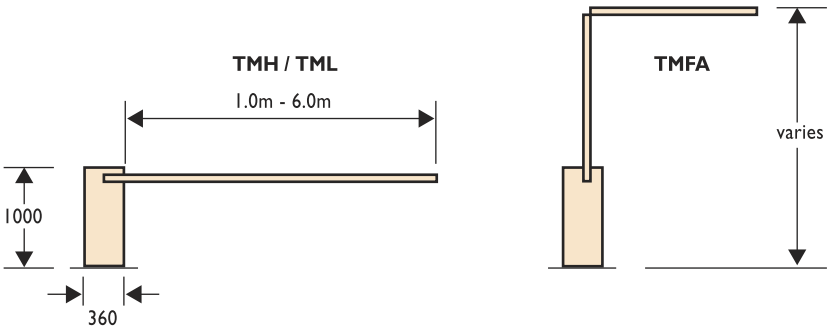

Product Range

Code	Description	Clear Opening [1] m	Optional Extension m
TMH	High Volume	3.5 one lane as standard	1m-6m
TML	Standard Volume	3.5 one lane as standard	1m-6m
TMFA	Folding Arm		
TMSK	Skirt (supplied in 2m length sections)		

1. Clear Opening is the width of the passage in which the boom gate assembly is manufactured to suit.

- *All configurations are standard, please contact your nearest Leda-Vannaclip Sales Office for custom sizes.*

Boom Gates

AUTOMATIC SLIDING

Automatic Sliding Boom Gate

Typical installation in tandem with induction loops

Materials
- Galvanised steel cabinet 3mm thick
- Galvanised RHS boom arm 200 x 100 x 4mm
- Galvanised RHS receiver post 100 x 100 x 4mm

Finishes
- Powder coated option

Drive System
- 0.37kW single phase motor and gearbox

Features
- Programmable to pre-set times
- Automatic vehicle egress when boom is closed
- Variable boom lengths 3.5m-9.0m
- Manual override for power outages

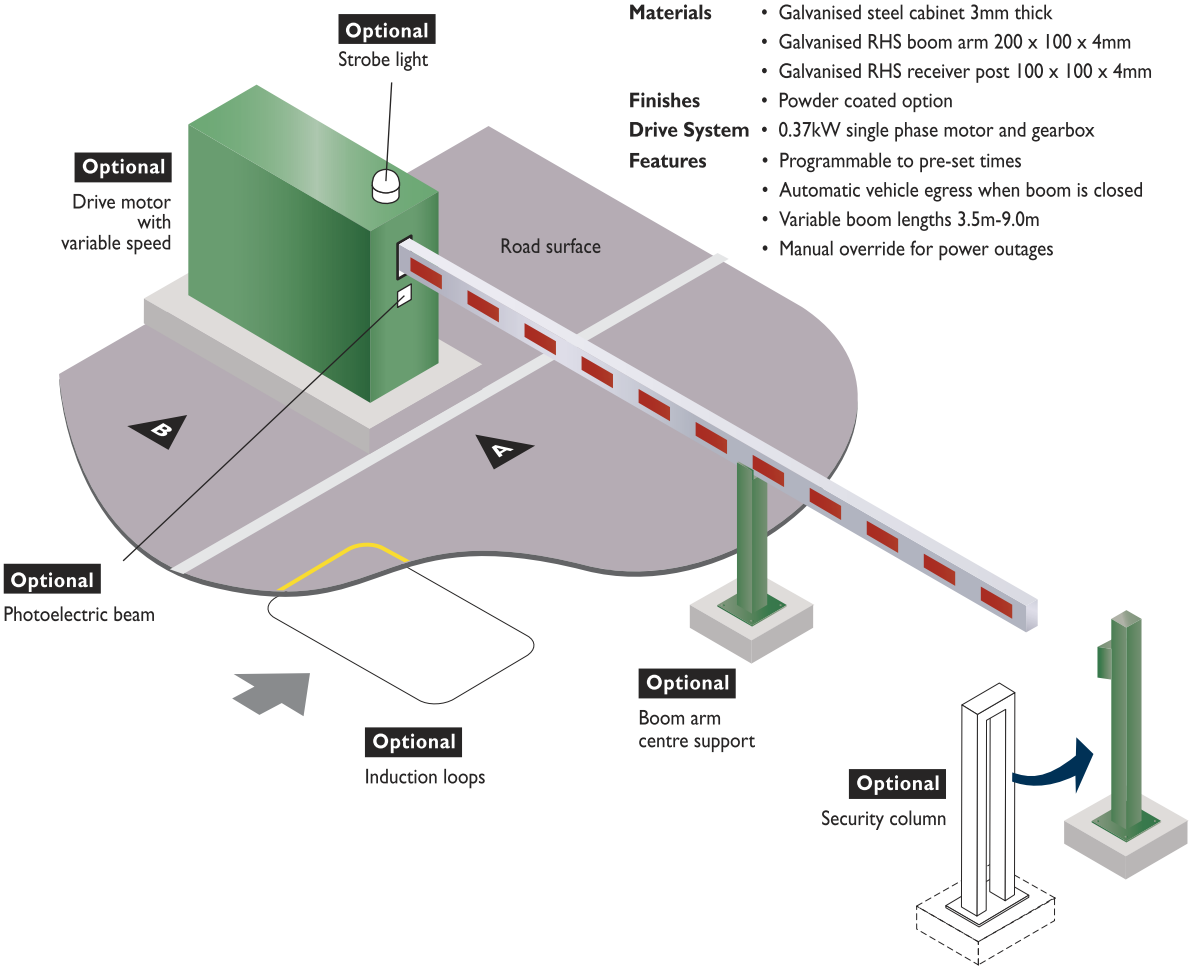

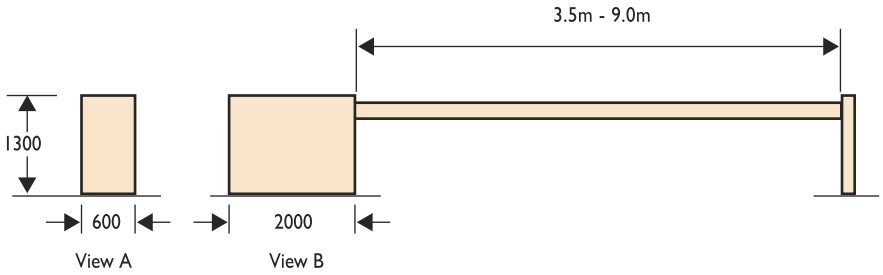

Product Range

Code	Description	Clear Opening [1] m	Optional Extension m
TMSBA4	Sliding Boom Gate	3.5 single lane	4.0
TMSBA8	Sliding Boom Gate	7.0 double lane	8.0

1. Clear Opening is the width of the passage in which the boom gate assembly is manufactured to suit.

- *All configurations are standard, please contact your nearest Leda-Vannaclip Sales Office for custom sizes.*

Boom Gates

MANUAL

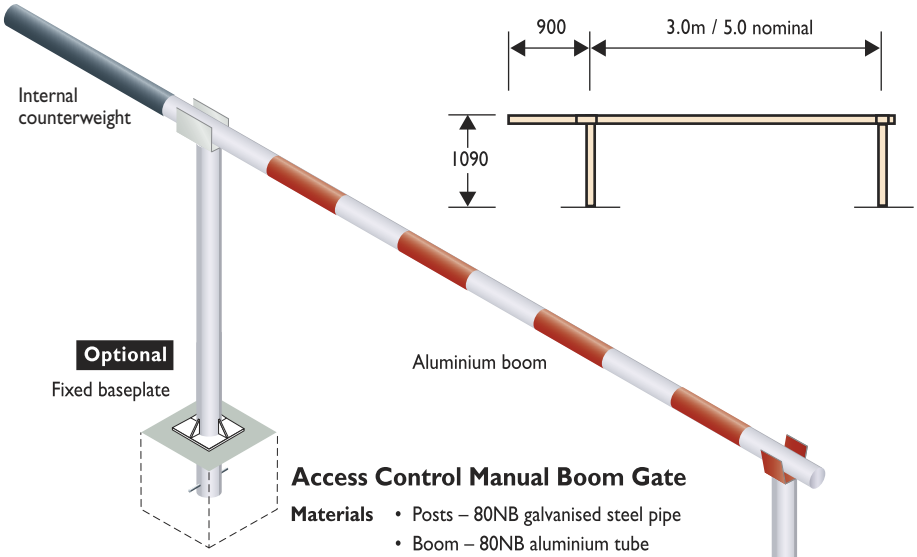

Access Control Manual Boom Gate

Materials
- Posts – 80NB galvanised steel pipe
- Boom – 80NB aluminium tube

Finishes
- Hot dipped galvanised with powder coat
- 2 pack spray as an option to powder coat

Features
- Cantilevered counterweight
- Corrosion resistant, easy maintenance

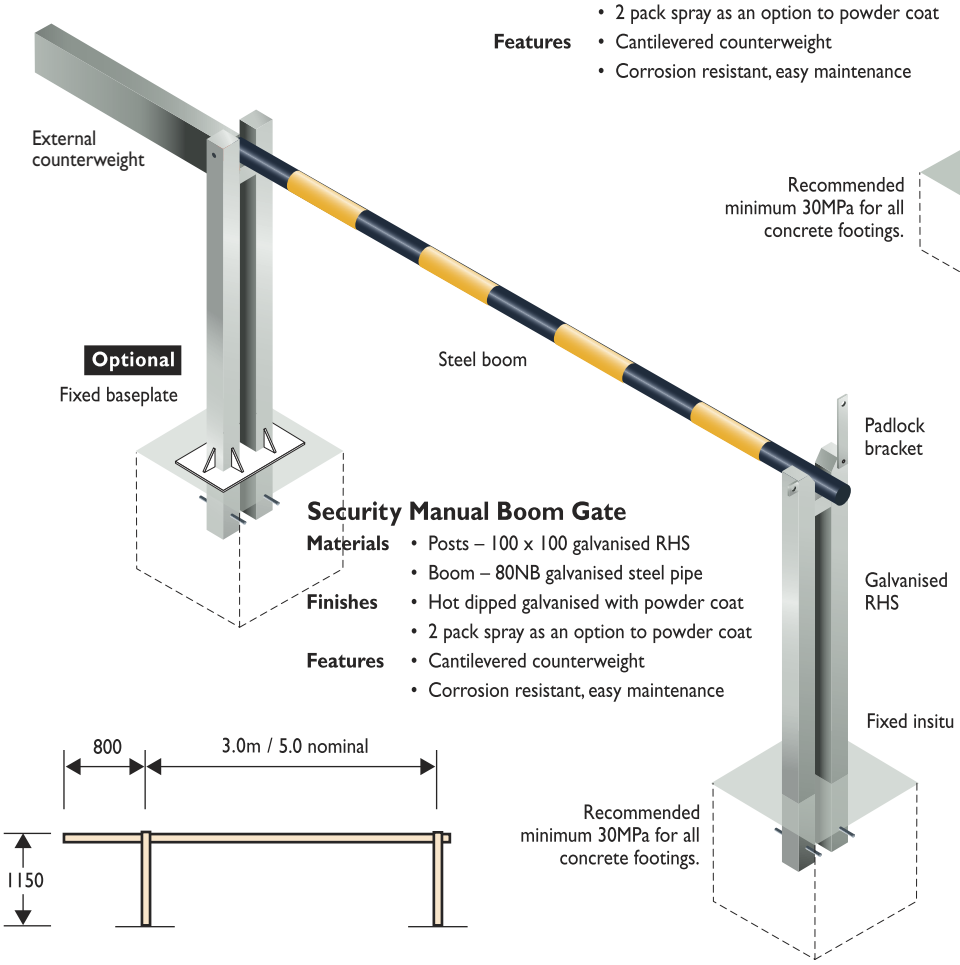

Security Manual Boom Gate

Materials
- Posts – 100 x 100 galvanised RHS
- Boom – 80NB galvanised steel pipe

Finishes
- Hot dipped galvanised with powder coat
- 2 pack spray as an option to powder coat

Features
- Cantilevered counterweight
- Corrosion resistant, easy maintenance

Product Range

Code Fixed Insitu	Code Fixed Baseplate	Description	Clear Opening [1] m	Height m
MBG F	MBG B	Access Control	3.0 - 5.0 nominal	1.15
MBGS F	MBGS B	Security	3.0 - 5.0 nominal	1.15

1. Clear Opening is the width of the passage in which the boom gate assembly is manufactured to suit.

- *All configurations are standard, please contact your nearest Leda-Vannaclip Sales Office for custom sizes.*

Boom Gates

MANUAL SWING

Manual Swing Gate

Materials
- Posts – 80NB galvanised steel pipe
- Gate – 40NB galvanised steel pipe

Finishes
- Hot dipped galvanised with powder coat
- 2 pack spray as an option to powder coat

Features
- Corrosion resistant, easy maintenance

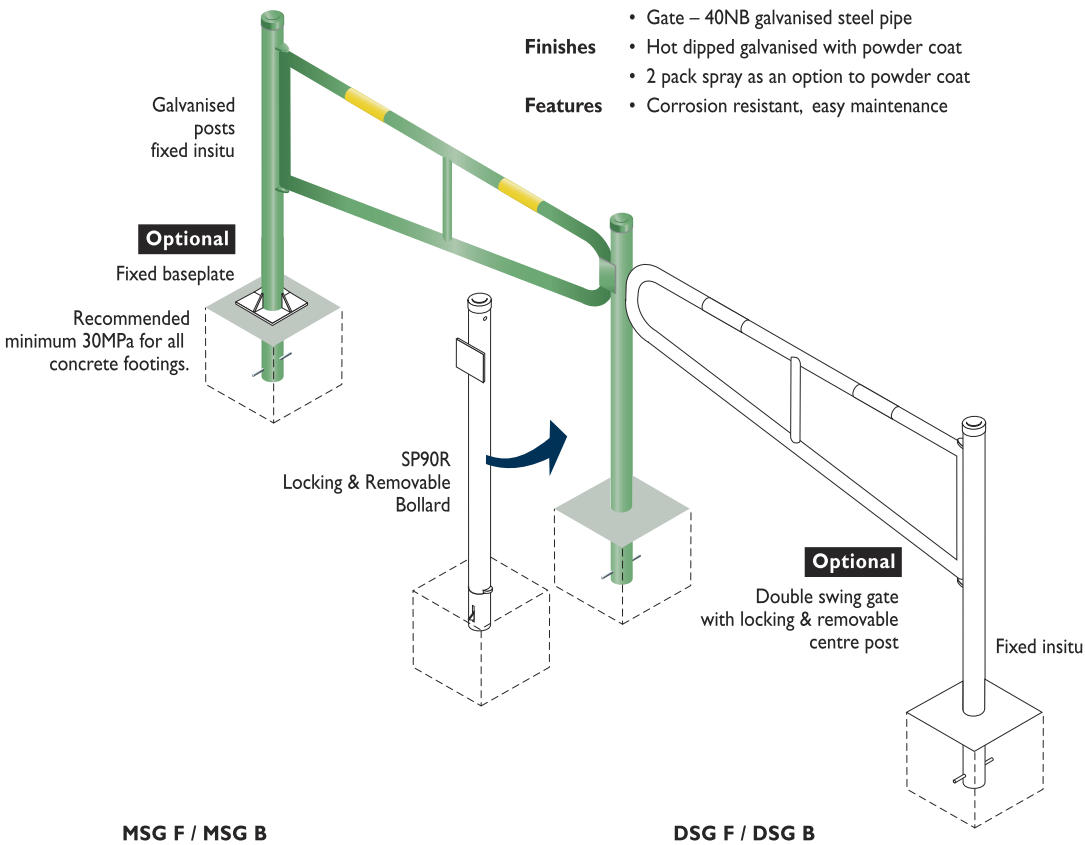

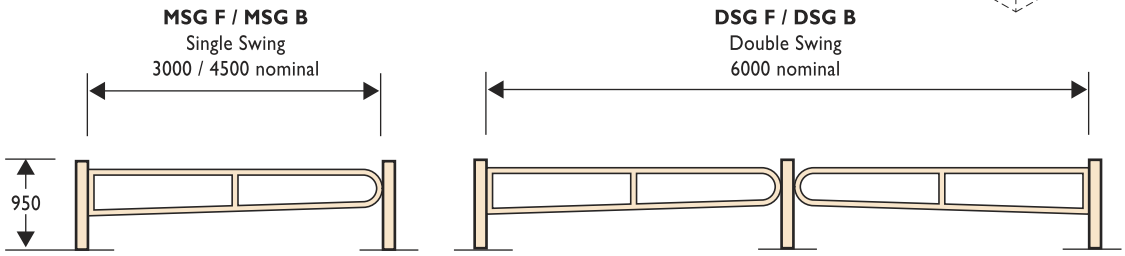

Product Range

Code Fixed Insitu	Fixed Baseplate	Description	Clear Opening [1] m	Height m
MSG F	MSG B	Access Control Single	3.0 - 4.5 nominal	0.95
DSG F	DSG B	Access Control Double with L&R Bollard	6.0 nominal	0.95

1. Clear Opening is the width of the passage in which the boom gate assembly is manufactured to suit.

- *All configurations are standard, please contact your nearest Leda-Vannaclip Sales Office for custom sizes.*